WK4315

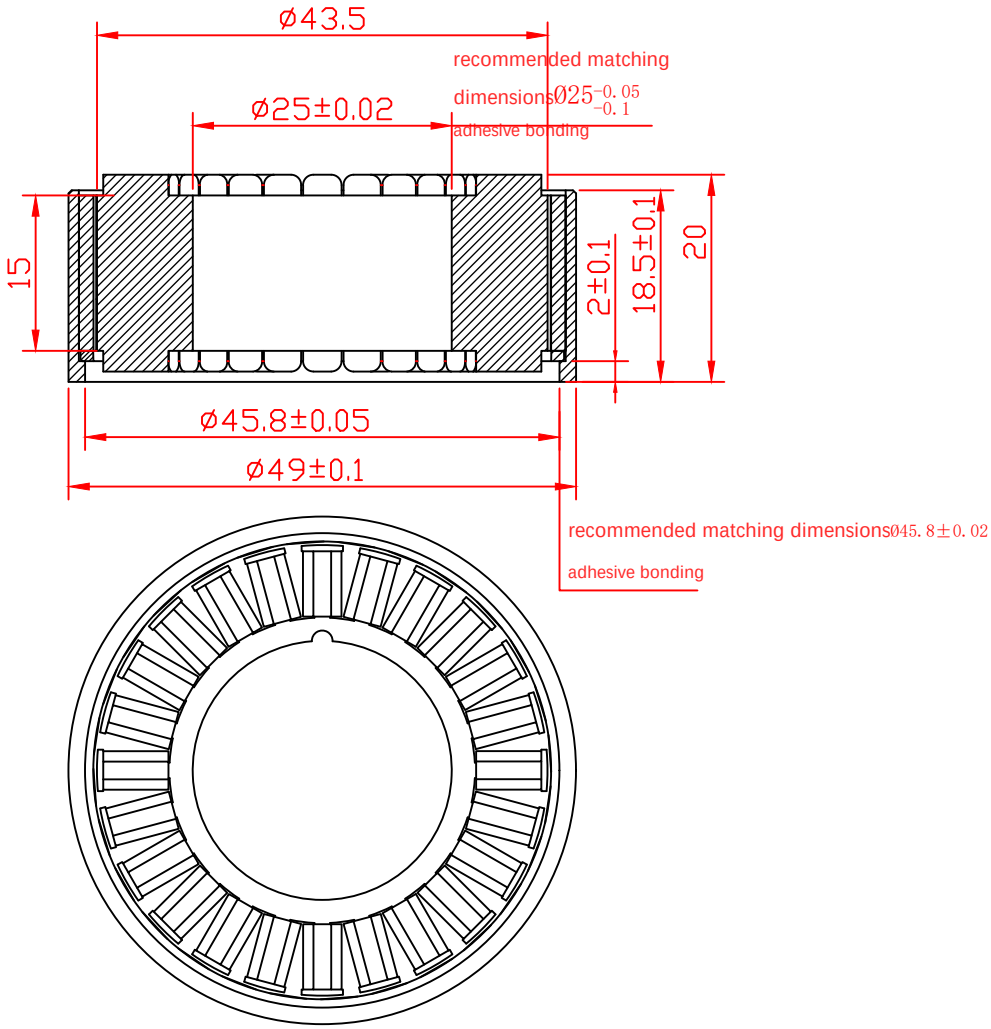

Unmarked tolerance segmentation (x)				
x≤6	6<x≤30	30<x≤120	120<x≤400	400<x≤2000
±0.1	±0.2	±0.3	±0.5	±1.0

Updated on 2025. 7. 10