■Outline drawing

Fig.150 -1

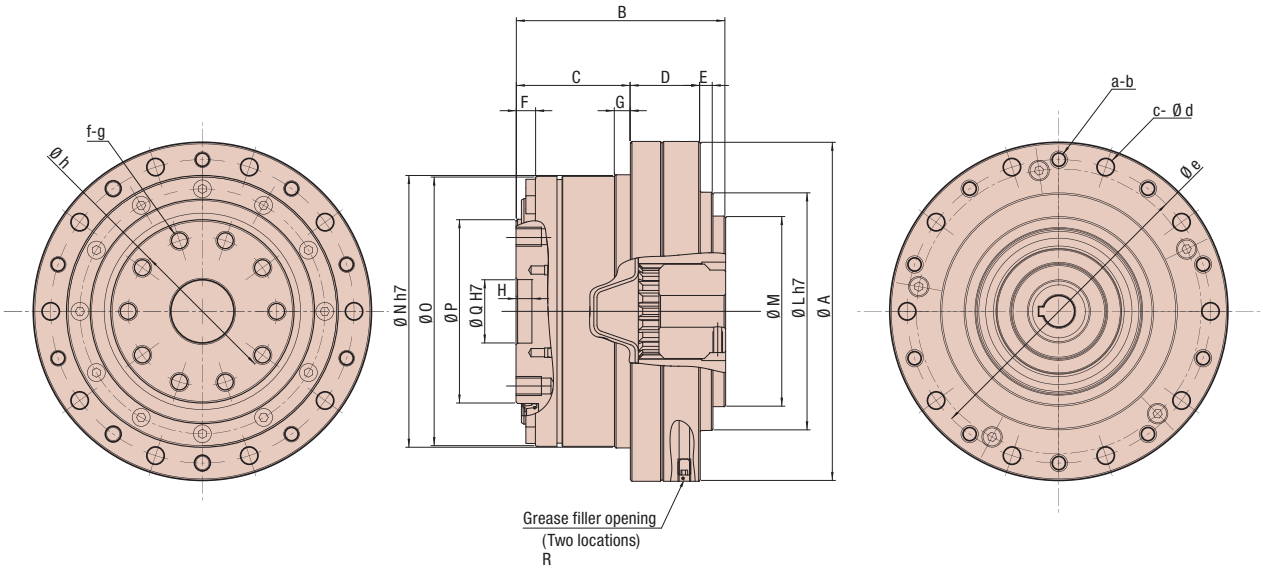

■Measurement table

Table150 -1
Unit: mm

Symbol \ Model	25	32	40	45	58	65
ϕA	107	138	160	180	226	260
B	66	75	85	102	120	129
C	36	45	50.5	58	77	84.5
D	22	24	30	32	37	38.5
E	4	4	4.5	7	6	6
F	6.1	6	7.1	7.6	8.5	9
H	5	5	5	6	10	6
ϕLh7	75	100	120	135	170	198
ϕM	60	60	-	108	-	-
ϕNh7	86	113	127	148	186	212
ϕO	85	112	126	147	185	210
ϕP	58	78	90	107	135	155
ϕQH7	20	26	32	32	46	52
R	M4 P=0.7	M5 P=0.8	M5 P=0.8	M6 P=1	M6 P=1	M6 P=1
a	10	12	10	12	12	8
b	M5	M6	M8	M8	M10	M12
c	10	12	10	12	12	8
ϕd	5.5	6.6	9	9	11	14
ϕe	96	125	144	164	206	236
f	10	10	12	12	8	12
g	M6	M8	M8	M10	M16	M14
ϕh	47	62	72	84	104	120
Mass (kg)	2.2	4.5	6.5	9.7	18.5	26.3

■Input spline external dimensions

Fig. 151 -1

• Input spline for straight key

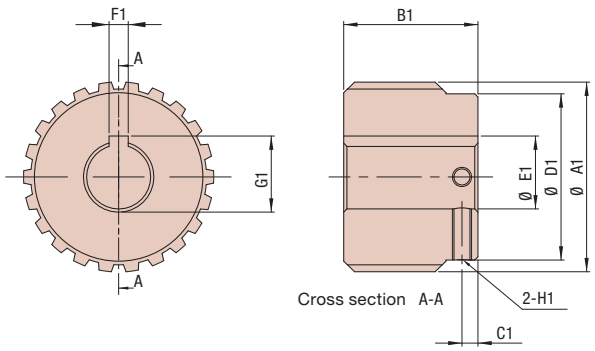

Fig. 151 -2

• Input spline for tapered shaft

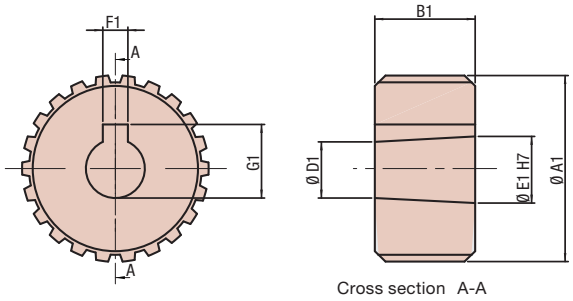

■Input spline external drawing measurements

Table151 -1
Unit: mm

Input Spline Form Symbol	A01		A02		A03		A04		A05	B01	B02	B03	C01			C02			C03			C04			C05		
Shaft shape	Straight ϕ14		Straight ϕ10		Tapered ϕ11		Tapered ϕ14		Tapered ϕ16	Straight ϕ24	Tapered ϕ16	Straight ϕ19	Straight ϕ35			Tapered ϕ16			Straight ϕ19			Straight ϕ24			Tapered ϕ32		
Model No.	25	32	25	32	25	32	25	32	32	40	40	40	45	58	65	45	58	65	45	58	65	45	58	65	45	58	65
ϕA1	29.75		29.75		29.75		29.75		29.75	44.667	44.667	44.667	54.5			54.5			54.5			54.5			54.5		
B1	21		21		16		19		29	37	29	37	62			29			37			37			50		
C1	2.5		2.5		-		-		-	5.8	-	5.8	12.5			-			5.8			5.8			-		
ϕD1	26		26		9.4		12.1		13.1	39.4	13.1	40	48			13.1			48			48			26		
ϕE1	14 $^{+0.034}_{+0.016}$		10 $^{+0.015}_{0}$		11 $^{+0.018}_{0}$		14 $^{+0.018}_{0}$		16 $^{+0.018}_{0}$	24 $^{+0.021}_{0}$	16 $^{+0.018}_{0}$	19 $^{+0.021}_{0}$	35 $^{+0.035}_{+0.010}$			16 $^{+0.018}_{0}$			19 $^{+0.021}_{0}$			24 $^{+0.021}_{0}$			31 $^{+0.025}_{0}$		
F1	5 ±0.015		3 ±0.013		4 ±0.015		4 ±0.015		5 ±0.015	8 ±0.018	5 ±0.015	6 ±0.015	10 ±0.018			5 ±0.015			6 ±0.015			8 ±0.018			7 ±0.018		
G1	16.3 $^{+0.1}_{0}$		11.4 $^{+0.1}_{0}$		12.5 $^{+0.1}_{0}$		15.8 $^{+0.1}_{0}$		17.6 $^{+0.1}_{0}$	27.3 $^{+0.2}_{0}$	17.6 $^{+0.1}_{0}$	21.8 $^{+0.1}_{0}$	38.3 $^{+0.2}_{0}$			17.6 $^{+0.1}_{0}$			21.8 $^{+0.1}_{0}$			27.3 $^{+0.2}_{0}$			33.8 $^{+0.1}_{0}$		
H1	M3		M3		-		-		-	M5	-	M5	M5			-			M5			M5			-		

■Input flange axial range dimensions

Fig. 151 -3

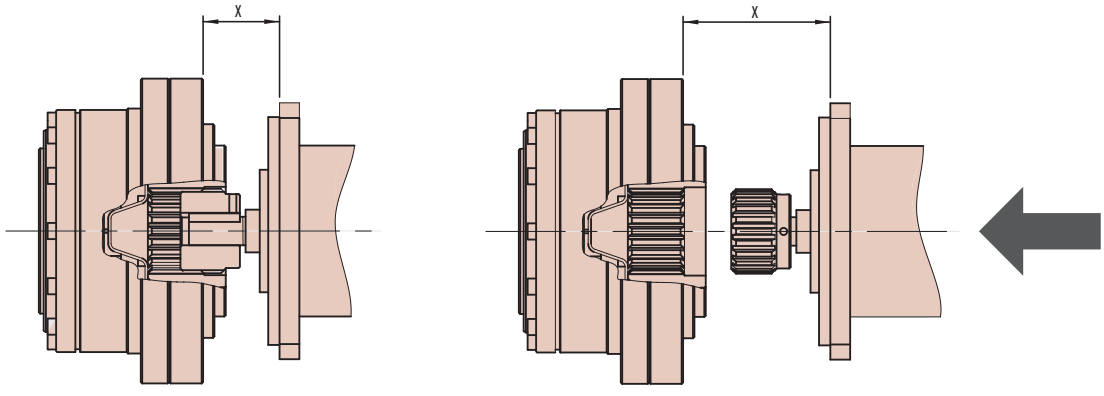

X: Input flange width range

■Input flange axial range drawing measurements

Table151 -2
Unit: mm

Input Spline Form Symbol	A01		A02		A03		A04		A05	B01	B02	B03	C01			C02			C03			C04			C05		
Shaft shape	Straight ϕ14		Straight ϕ10		Tapered ϕ11		Tapered ϕ14		Tapered ϕ16	Straight ϕ24	Tapered ϕ16	Straight ϕ19	Straight ϕ35			Tapered ϕ16			Straight ϕ19			Straight ϕ24			Tapered ϕ32		
Model No.	25	32	25	32	25	32	25	32	32	40	40	40	45	58	65	45	58	65	45	58	65	45	58	65	45	58	65
Xmin	13	11	13	11	13	11	14	11	21	22	14.5	22.5	48.8	31.6	27.8	16	11	-	24	-	-	23	9	-	63.5	43.8	38.8
Xmax	17.1	14	21.1	18	16.1	13.5	19.1	16	28	33.8	25.8	34.8	56.8	56.2	56.2	22	21.4	-	31	-	-	34.3	29.4	-	67.3	62.4	62.4