1 Features

1.1 Hardware

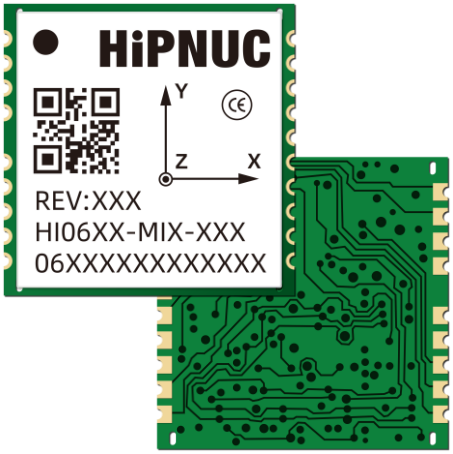

- High-performance, low-noise MEMS IMU
- Integrated low-noise, high-reliability LDO
- Vibration-resistant design for dynamic and vibration-prone environments
- Integrated temperature sensor
- Supports external GNSS
- Compact SMT package (15 × 15.2 × 2.6 mm), easy to integrate
- Product design complies with relevant RoHS requirements; materials meet halogen-free specifications; for certification status, please refer to the latest official information
- Provides multiple peripheral interfaces, including 4 × UART. Selected models support CAN. I2C/SPI interfaces are reserved but not supported by the current firmware
- Supports customization
- Some models provide multifunction I/O, which can be used for synchronization, LED, alarm, and other functions
- Some models support PPS + GPRMC time synchronization; refer to the selection table and pin definitions for details
- Factory-calibrated and compensated over the full temperature range of -40 °C to 85 °C, including bias, scale factor, and cross-axis calibration

1.2 Software

- Adaptive EKF fusion algorithm
- The UART output data rate supports up to 1000 Hz, depending on output type and configuration, with low output latency
- Optimized attitude tracking and vibration suppression performance for dynamic motion scenarios
- Can reduce the influence of linear acceleration on attitude estimation under typical operating conditions
- Supports serial binary protocol, CAN, Modbus, and other communication protocols
- Comprehensive user configuration commands
- Multifunctional GUI for easy operation
- Supports various examples for ROS1, ROS2, C, MATLAB, Python, Arduino, etc.

2 Applications

The HI06 series is designed for high-performance attitude sensing and complex operating conditions, and is suitable for attitude measurement and control scenarios under temperature variation, vibration, and dynamic motion conditions. Typical applications include:

- Platform stabilization and control
- Construction machinery
- Humanoid robots
- Unmanned aerial vehicles (UAVs)
- Low-speed autonomous robots
- Smart agricultural machinery

3 Description

3.1 System Block Diagram

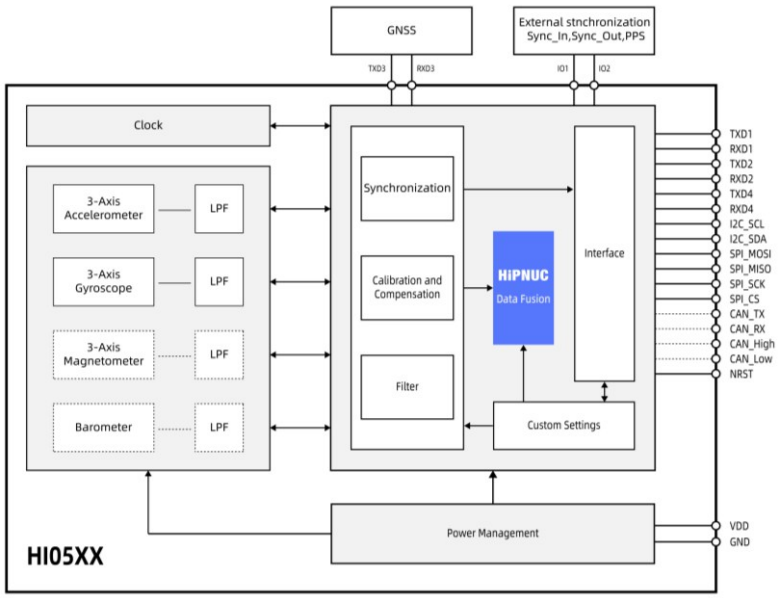

Figure 1: HI06 Series System Block Diagram

Note 1: Dashed lines indicate functions not supported by some models. Refer to Table 1: Product Selection Information for details.

3.2 Description

The HI06 series is a MEMS-based IMU/VRU/AHRS/INS sensor module featuring proprietary adaptive EKF, IMU noise analysis, motion-state analysis, and GNSS fusion algorithms. It provides high-quality attitude, angular rate, and acceleration data, and for INS-capable models, position and velocity data with an external GNSS input.

Each module is factory calibrated and compensated for temperature, bias, scale factor, and cross-axis errors.

The module supports data communication over UART, and selected models also support CAN, with some requiring an external CAN transceiver. I2C and SPI interfaces are reserved but not supported by the current firmware. Models with synchronization capability support PPS + GPRMC time synchronization or trigger-based synchronization with external systems.

The multifunction GUI software supports rapid evaluation, including module configuration, data visualization, firmware upgrade, and data logging.



Figure 2: GUI Software

Contents

1 Features 1
1.1 Hardware 1
1.2 Software 1
2 Applications 1
3 Description 2
3.1 System Block Diagram 2
3.2 Description 2
4 Product Selection 5
5 Ordering Information 6
5.1 Ordering Code 6
5.2 Contact Information 6
6 Document Information 7
6.1 Revision History 7
6.2 Related Documents and Development Kits 7
7 HI06 System Architecture 8
7.1 IMU 8
7.2 VRU 8
7.3 AHRS 8
7.4 INS 8
8 Pin Definitions 10
9 Interfaces and Reference Designs 11
9.1 Power Supply 11
9.2 UART 11
9.3 I2C 12
9.4 SPI 12
9.5 CAN 12
9.6 Typical CAN Reference Design 12
9.7 Synchronization 12
9.7.1 HI06 Host-Triggered Synchronization (UART) 12
9.7.2 Host PPS + GPRMC Time Synchronization (UART) 13
9.7.3 External Device PPS + GPRMC Synchronization (UART) 13
9.7.4 CAN (Synchronization) 13
9.8 INS System 14
9.9 Reference Design BOM 14
10 Sensor Specifications 15
10.1 Gyroscope 15

10.2 Accelerometer 16
10.3 Magnetometer 17
10.4 Temperature Sensor 17
10.5 Fusion Accuracy 17
10.5.1 Attitude Angle Accuracy 17
10.5.2 INS Accuracy with External GNSS 17
11 System and Electrical Specifications 18
11.1 Electrical Specifications 18
11.2 Interface Specifications 18
11.3 System Specifications 18
11.4 Absolute Maximum Ratings 19
12 Mechanical Dimensions 20
12.1 Product Dimensions 20
12.2 Recommended Footprint Dimensions 21
13 Coordinate System 22
13.1 IMU/VRU/AHRS Coordinate System 22
13.1.1 ENU (Default) 22
13.1.2 NWU and NED 22
13.2 INS System Coordinate System 23
14 Evaluation Board and Cabling 24
15 Communication Protocols 25
15.1 Serial Binary Protocol 25
15.2 Modbus 25
15.3 CAN 25
16 Soldering and Installation 26
16.1 Reflow Profile 26
16.2 Installation Recommendations 26
17 Packaging 28
17.1 Tape 28
17.2 Reel 28
17.3 Packaging Method 28
18 Disclaimer 29

4 Product Selection

Table 1: Selection Information

HI06a-b-c							
Identifier	Series	a-Sensor Configuration		b-Data Interface		c- Other Information	
HI	06	T2	IMU/VRU	MI0	UART/CAN (external CAN transceiver required)	000	Default
		N2	IMU/VRU/INS			Other	Custom
		T3	IMU/VRU/AHRS				
		N3	IMU/VRU/AHRS/INS				

Note 1: For current standard models, refer to the Ordering Information section. Other models can be customized.

Table 2: HI06 Series Module Configuration

Model	3-Axis Accelerometer	3-Axis Gyroscope	3-Axis Magnetometer	INS
HI06T2-MI0	√	√	×	×
HI06N2-MI0	√	√	×	√
HI06T3-MI0	√	√	√	×
HI06N3-MI0	√	√	√	√

Table 3: HI06 Interface Configuration

Model	4 × UART	I2C/SPI	CAN	2 × Sync Pins (Multifunction I/O)
HI06T2-MI0	√	Reserved, not supported by current firmware	External CAN transceiver required	√
HI06N2-MI0	√	Reserved, not supported by current firmware	External CAN transceiver required	√
HI06T3-MI0	√	Reserved, not supported by current firmware	External CAN transceiver required	×
HI06N3-MI0	√	Reserved, not supported by current firmware	External CAN transceiver required√	√

Note 1: Multifunction I/O is not limited to synchronization functions, and also supports LED, alarm, and other functions. Refer to the Command and Programming Manual for details.

5 Ordering Information

5.1 Ordering Code

Table 4: Ordering Code

Part Number	Name	Description	Remark
HI06T2-MI0-000	IMU/VRU Module	IMU/VRU	
HI06N2-MI0-000	IMU/VRU/INS Module	IMU/VRU/INS	
HI06T3-MI0-000	IMU/VRU/AHRS Module	IMU/VRU/AHRS	
HI06N3-MI0-000	IMU/VRU/AHRS/INS Module	IMU/VRU/AHRS/INS	

6 Document Information

6.1 Revision History

Table 5: Revision History

Version	Date	Author	Description
1.0	May 31, 2025	Hipnuc	Initial version
1.1	Feb 9, 2026	Hipnuc	Updated specifications, dimensions, and descriptions

6.2 Related Documents and Development Kits

1. Command and Programming Manual
2. STEP / Package Files
3. EVAL HI06 User Guide and design files
4. Certification and compliance documents
5. GUI and reference examples

7 HI06 System Architecture

The HI06 series is a high-performance sensor module integrating IMU, VRU, AHRS, and INS functions. It undergoes strict scale factor, cross-axis, temperature, and bias calibration and testing before leaving the factory, and can provide users with raw sensor data (such as acceleration, angular velocity, and, for some models, geomagnetic field and air pressure), 3D orientation data (Euler angles, namely pitch, roll, and yaw), quaternion data, and more. For models supporting INS, velocity and position information can also be provided after connecting an external GNSS.

Depending on the model, the HI06 module may be equipped with a 3-axis accelerometer, 3-axis gyroscope, 3-axis magnetometer, barometer, and a high-performance processor. This processor is mainly used for sensor synchronization, calibration, algorithm fusion, and user configuration. In addition, based on application scenarios and sensor characteristics, we provide users with multiple operating modes, such as 6-DoF, AHRS, humanoid robot mode, etc. Refer to the Command and Programming Manual for details.

7.1 IMU

HI06 can be used as an inertial measurement unit (IMU) to provide users with precise 3D acceleration and 3D angular velocity data. These data are collected through the internally integrated high-precision accelerometer and gyroscope, and can reflect the motion state and dynamic changes of an object in three-dimensional space in real time. Compared with traditional IMU chips, the significant advantage of HI06 is that it has undergone strict calibration and compensation correction before leaving the factory, greatly improving the accuracy and stability of the output data. These calibrations include cross-axis, scale factor, bias, and temperature.

7.2 VRU

Through our self-developed algorithm fusion engine, HI06 can deeply process and optimize basic IMU data, thereby outputting high-precision 3D orientation data based on the gravity reference frame. These orientation data include pitch, roll, and yaw, providing users with intuitive and reliable attitude information support.

7.3 AHRS

Based on IMU and VRU, HI06 is further upgraded into a more powerful attitude and heading reference system (AHRS) by introducing a high-precision, wide-range TMR (tunnel magnetoresistance) 3-axis magnetometer. This upgrade significantly enhances HI06's attitude sensing capability, enabling it to provide users with more comprehensive and accurate attitude data, including long-term stable pitch, roll, and yaw based on magnetic north reference.

7.4 INS

By connecting an external global navigation satellite system (GNSS) module, the HI06 series sensor can be upgraded into a powerful inertial navigation system (INS) module. By combining the high-precision positioning capability of GNSS with the inertial measurement data of the built-in IMU in HI06, the INS module can output multiple types of high-precision data, including:

Velocity information: The INS module can output real-time velocity data of the object in three-dimensional space. Combined with GNSS signals and inertial measurement data, it can provide accurate velocity change information, suitable for dynamic motion analysis and navigation scenarios.

Position information: Through GNSS global positioning, the INS module can obtain the geographic position coordinates of the object (longitude, latitude, altitude, etc.) in real time. The fusion with inertial measurement data can also compensate for GNSS signal loss for a short period of time, thereby ensuring continuity of position information.

Attitude information: Under the combined action of IMU and GNSS data, the INS module can provide high-precision 3D attitude

data, including pitch, roll, and yaw. These attitude data are optimized by algorithms and feature excellent dynamic response performance and anti-interference capability, making them suitable for aircraft, UAVs, vehicle navigation, and other scenarios requiring precise attitude sensing.

Timing information: The INS module can provide high-precision time synchronization information through GNSS signals. This is particularly important in applications requiring strict time synchronization, such as communication base stations, navigation systems, and scientific experiments.

In addition, through factory calibration and fusion algorithm optimization, drift accumulation common in inertial navigation can be suppressed to a certain extent, and short-term continuous navigation capability can be provided in scenarios where GNSS is temporarily blocked.

8 Pin Definitions

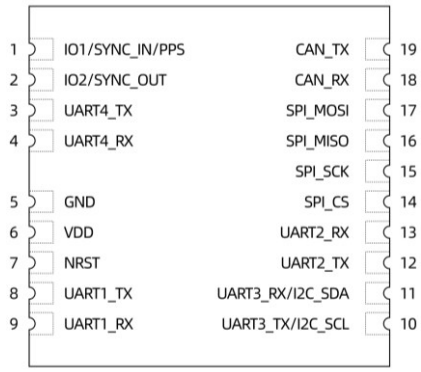

Figure 3: HI06XX-MI0 Pin Definitions

Table 6: MI0 Pin Function Description

Pin Number	Pin Name	Type	Functional	Remark
1	IO1(SYNC_IN/PPS)	I/O	Synchronization input, can accept external trigger signals such as GNSS PPS signal	
2	IO2(SYNC_OUT)	I/O	Synchronization output, can be used as Data Ready signal	
3	UART4_TX	I/O	UART4 transmit	
4	UART4_RX	I/O	UART4 receive	
5	GND	Power	Power ground	
6	VDD	Power	Power input 3.2 V ~ 5.0 V	
7	NRST	I	Reset pin, low level resets the module; recommended to connect to host GPIO; may be left floating if unused	
8	UART1_TX	I/O	UART1 transmit	
9	UART1_RX	I/O	UART1 receive	
10	UART3_TX/I2C_SCL	I/O	UART3 transmit, can connect to external GNSS module / I2C clock signal	
11	UART3_RX/I2C_SDA	I/O	UART3 receive, can connect to external GNSS module / I2C data signal	
12	UART2_TX	I/O	UART2 transmit	
13	UART2_RX	I/O	UART2 receive	
14	SPI_CS	I/O	SPI chip select signal	
15	SPI_SCK	I/O	SPI clock signal	
16	SPI_MISO	I/O	SPI data output signal (slave)	
17	SPI_MOSI	I/O	SPI data input signal (slave)	
18	CAN_RX	I/O	CAN receive signal	1
19	CAN_TX	I/O	CAN transmit signal	

Note 1: If CAN is used, an external CAN transceiver is required, such as TJA1044.

Table 7: UART Function Description

Port	Data Transmission	Command Configuration	GPRMC/UTC	RTCM	GNSS	Firmware Upgrade
UART1	√	√	√	×	×	√
UART2	√	√	√	√	×	×
UART3	×	×	√	×	√	×
UART4	×	×	×	×	×	×

9 Interfaces and Reference Designs

9.1 Power Supply

The module integrates an LDO to suppress the impact of input power noise on internal analog and digital circuits. The recommended input voltage range is 3.2 V ~ 5.0 V. For the operating voltage range, refer to 11.1 Electrical Parameters. External power supply can use LDO or DC/DC.

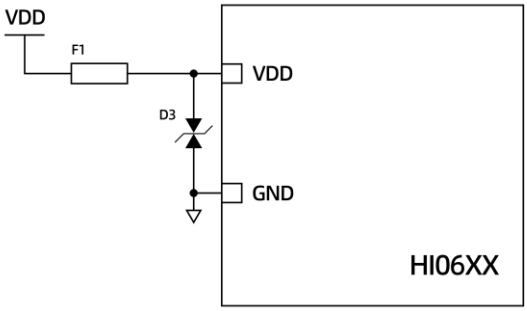

Figure 4: HI06 Power Supply Reference Circuit

9.2 UART

The HI06 series sensor supports flexible and diverse communication methods, and can communicate through UART1/UART2 in full-duplex mode. By default, the communication frame format is standard 8N1 mode, namely:

- Baud rate: 115200 bps (adjustable as needed)
- Data bits: 8 bits
- Parity: none
- Stop bits: 1 bit

This communication configuration is a standard configuration in industrial applications, with strong compatibility, and can seamlessly interface with most embedded systems, industrial control devices, robot controllers, etc.

In addition, HI06 can also expand the UART interface into RS-485 or RS-422 communication by adding external RS-485 or RS-422 transceivers, further enhancing the applicability and scalability of the module.

Note 1: Both baud rate and data output frame rate can be modified through commands. Refer to the Command and Programming Manual for details.

When using the HI06 series sensor for UART communication, it is recommended that the logic level of the user's processor be 3.3 V. If communication with a processor of 5 V or 1.8 V logic level is required, the user needs to add a level shifting chip to ensure reliable communication and device safety.

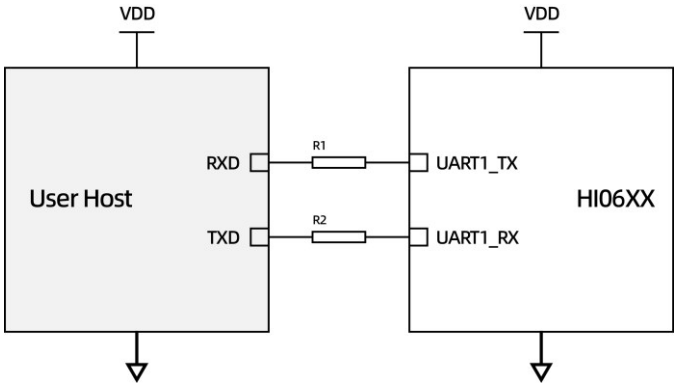

Figure 5: HI06 UART Communication Minimum System Reference Circuit

9.3 I2C

Not supported by the current firmware version. Planned for support in future versions.

9.4 SPI

Not supported by the current firmware version. Planned for support in future versions.

9.5 CAN

Models supporting CAN can implement the standard CAN 2.0B communication protocol. The default baud rate is 500 kbps, which can meet the needs of most industrial and embedded applications. Users can also modify the baud rate through commands to adapt to different communication scenarios. Refer to the Command and Programming Manual for details.

9.6 Typical CAN Reference Design

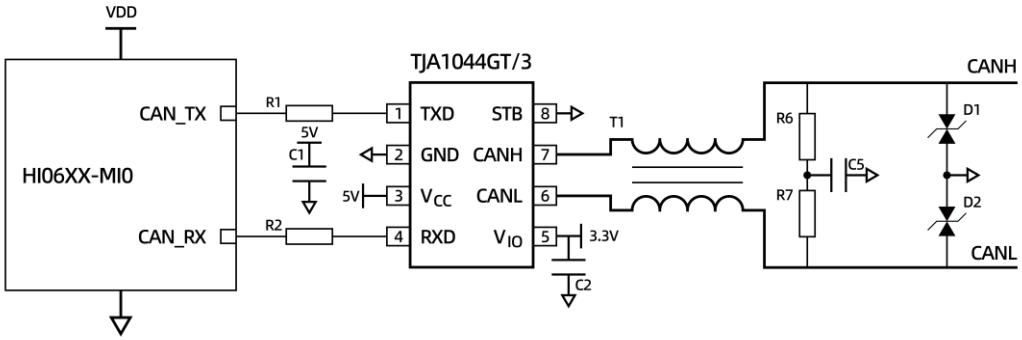

Figure 6: HI06XX-MI0 CAN Communication Circuit Reference

Note 1: Baud rate, ID, etc. can be modified through commands. Refer to the Command and Programming Manual for details.

Note 2: Terminal resistor configuration should be determined according to the system bus topology. R6/R7 in the reference circuit are for design reference only.

9.7 Synchronization

HI06 models supporting synchronization can implement pulse-trigger synchronization and PPS + GPRMC time synchronization, and can perform time alignment with the host or external devices (such as GNSS, cameras, radars, etc.). Refer to Table 3 for specific support.

9.7.1 HI06 Host-Triggered Synchronization (UART)

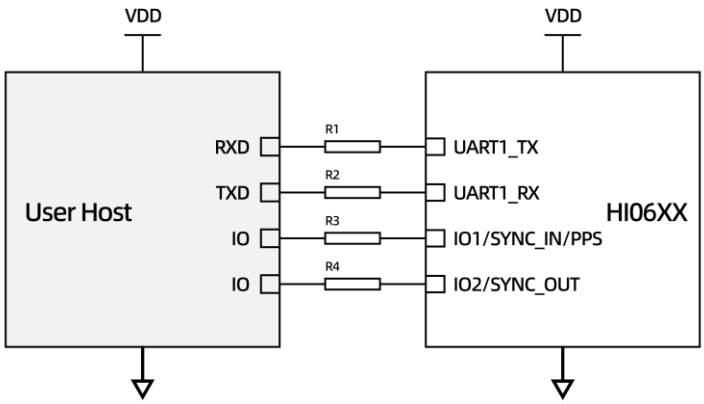

Figure 7: HI06 Host-Triggered Synchronization (UART Communication)

In this connection method, the user needs to directly connect IO1/IO2 to the host system for trigger synchronization between systems. If IO1 is used as synchronization input, then IO1 is in synchronization input mode, and the host needs to generate pulses with the same frequency as the data frame rate and send them to HI06. If IO2 is used, then IO2 needs to be in

synchronization output mode, and the synchronization output pulse has the same frequency as the data frame rate and can be used as a Data Ready signal. IO1 and IO2 do not have to be used at the same time. The user can choose which synchronization method to use according to the specific system.

9.7.2 Host PPS + GPRMC Time Synchronization (UART)

In this connection method, the user needs to directly connect IO1/IO2 to the host system for inter-system time synchronization. At this time, IO1 is in synchronization input PPS mode, and the host needs to generate a PPS pulse per second to HI06. If IO2 is used, then IO2 needs to be in synchronization output mode, and the synchronization output pulse has the same frequency as the data frame rate and can be used as a Data Ready signal. UART1_RX shall receive the GPRMC message generated by the host.

9.7.3 External Device PPS + GPRMC Synchronization (UART)

HI06 can perform PPS + GPRMC time synchronization with external devices. The external device needs to generate PPS and RMC information. At this time, note that HI06, the user host, and GNSS must share a common ground. IO1 is responsible for receiving the PPS pulse signal generated by the external device, and UART2_RX/UART3_RX receives the RMC information.

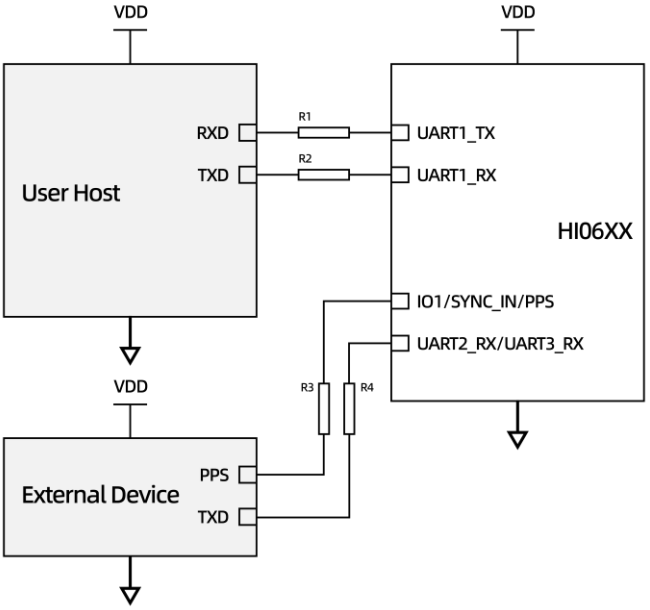

Figure 8: HI06 and External Device PPS + GPRMC Synchronization

9.7.4 CAN (Synchronization)

In CAN communication scenarios, synchronization can also be implemented. At this time, HI06 communicates with the host through the CAN interface, and the synchronization I/O can continue to be used for external triggering or time alignment. For specific synchronization timing and configuration methods, refer to the UART synchronization method.

9.8 INS System

The HI06NX series can connect external GNSS to implement an INS system, providing users with attitude, position, velocity, timing, and other information. UM982 is used here as an example to describe how HI06NX connects to external GNSS.

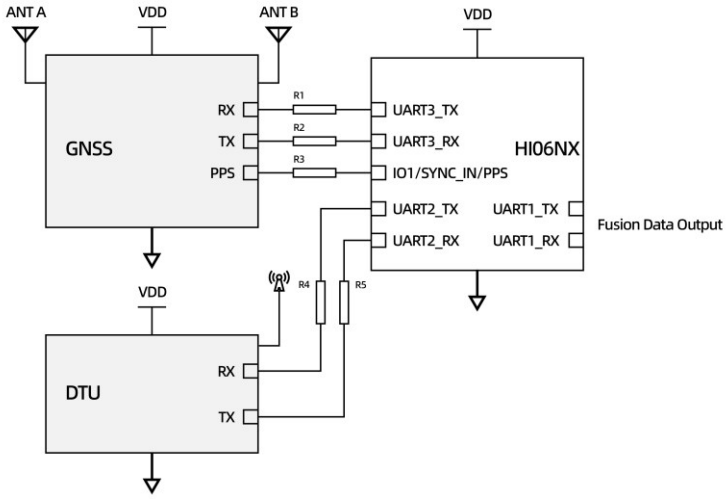

Figure 9: HI06NX with External GNSS

Note 1: DTU is not a necessary system element. Users may choose whether to add DTU according to their system design requirements.

9.9 Reference Design BOM

Table 8: Reference Design BOM

Item	Reference	Part	P/N	Vendor
Fuse	F1	300 mA	JK-SMD0603-030-6	JK
TVS	D3	SMF5.0CA	SMF5.0CA	Littelfuse
Resistor	R1,R2,R3,R4,R5	1 kΩ	RC0402JR-071KL	YAGEO
Resistor	R6,R7	60.4 Ω	RC1206FR-0760R4L	YAGEO
Capacitor	C1,C2	0.1 μF	CC0402KRX5R7BB104	YAGEO
Capacitor	C5	1 nF	CC0402KRX7R9BB102	YAGEO
Common Choke	T1	5.8 kΩ @ 10 MHz, 100 μH @ 100 kHz, 150 mA	ACT45B-101-2P-TL003	TDK
TVS	D1,D2	SMBJXXCA	SMBJXXCA	Littelfuse

Note 1: Series resistors may be matched according to communication distance, rate, and system immunity requirements. Typical options are 33 Ω, 100 Ω, or 1 kΩ.

Note 2: The voltage rating of the TVS device should be selected according to the system power platform. In multi-node cascaded scenarios, SMAJ series devices may also be selected.

10 Sensor Specifications

10.1 Gyroscope

Table 9: Gyroscope Specifications

Parameter	Condition	Min	Typ	Max	Unit	Remark
Range			±250 ±500 ±1000 ±2000 ±4000		°/s	Default: ±2000
Resolution			16	20	bit	
Scale Factor Error	100 °/s before SMT 100 °/s after SMT		250 1200	400 2000	ppm	Typical: RMS
Nonlinearity			±0.05		%FS	1
Noise Density	Bandwidth 10 Hz		0.0025		°/s/√Hz	
3 dB Bandwidth			80	400	Hz	2
Zero-rate Output				±0.12	°/s	3
Sampling Rate			1000		Hz	
Bias Instability	Allan Variance	X Y Z	0.9 1.1 1.0	1.5 1.4 1.5	°/h	Typical: 1σ; Max: 3σ
Bias Stability	10 s Average	X Y Z	3.1 2.9 3.0	5 4.5 6.5	°/h	Typical: 1σ; Max: 3σ
Bias Repeatability		X Y Z	7 6 6	18 19 13	°/h	
Angle Random Walk (ARW)	Allan Variance	X Y Z	0.055 0.057 0.059	0.07 0.07 0.07	°/√h	Typical: 1σ; Max: 3σ
Bias Temperature Drift	-40 °C ~ 85 °C		0.07	0.15	°/s	4
g - Sensitivity	XYZ		0.05		°/s/g	

Note 1: Maximum deviation from the best-fit straight line within the specified range.

Note 2: Different modes have different bandwidths. The default 6-DoF mode is 80 Hz.

Note 3: After initial bias calibration, bias can be estimated in real time by the algorithm engine.

Note 4: Measured in Hipnuc laboratory environmental chamber and turntable, with heating ramp rate less than 3 °C/min.

10.2 Accelerometer

Table 10: Accelerometer Parameters

Parameter	Condition		Min	Typ	Max	Unit	Remark
Range				±2 ±8 ±16 ±32		g	Default: ±16
Resolution				16	20	bit	
Initial Bias	Before SMT, horizontal static After SMT, horizontal static			1 5	2 10	mg	Typical: RMS
Nonlinearity				0.01		%FS	1
3 dB Bandwidth				90	400	Hz	2
Noise Density	Bandwidth 10 Hz			0.05	0.07	mg/√Hz	
Sampling Rate				1000		Hz	
Bias Instability	Allan Variance	X Y Z		0.0045 0.0065 0.01	0.006 0.009 0.014	mg	Typical: 1σ; Max: 3σ
Bias Stability	10 s Average	X Y Z		0.011 0.018 0.03	0.015 0.023 0.05	mg	Typical: 1σ; Max: 3σ
Bias Repeatability	Allan Variance	X Y Z		0.06 0.04 0.06	0.18 0.125 0.125	mg	Typical: 1σ Max: 3σ
Velocity Random Walk	Allan Variance	X Y Z		0.009 0.01 0.012	0.01 0.012 0.014	m/s/√h	Typical: 1σ; Max: 3σ
Bias Temperature Drift	-40 °C ~ 85 °C	XY Z		2 6	5 15	mg	3

Note 1: Maximum deviation from the best-fit straight line within the specified range.

Note 2: Different modes have different bandwidths; the default 6-DoF mode bandwidth is 90 Hz.

Note 3: Tested on the temperature chamber turntable of Hipnuc Laboratory, with a temperature rise rate less than 3 °C/min.

10.3 Magnetometer

Table 11: Magnetometer Specifications

Parameter	Condition	Min	Typ	Max	Unit	Remark
Range			±2000		μT	
Noise		0.19	0.45		μT	
Nonlinearity		±10	±20		μT	

10.4 Temperature Sensor

Table 12: Temperature Sensor Specifications

Parameter	Condition	Min	Typ	Max	Unit	Remark
Range		-40	-	85	℃	
Offset Error			±5		℃	

10.5 Fusion Accuracy

Unless otherwise specified, the following fusion accuracy data are measured after factory calibration under typical installation conditions. Attitude accuracy is related to installation flatness, mechanical stress, vibration environment, linear acceleration, magnetic field environment, and user calibration status. Actual application results may vary.

10.5.1 Attitude Angle Accuracy

Table 13: Attitude Angle Accuracy

Parameter	Condition	Min	Typ	Max	Unit	Remark
Pitch/Roll (Static)	Before SMT		0.08	0.12	°	1
	After SMT		0.2	0.4		
Pitch/Roll (Dynamic)	Before SMT		0.1	0.2	°	
	After SMT		0.3	0.5		
Heading (AHRS)			2	3	°	2
Heading Static Drift (6-DoF)	Static 2 h		0.15	0.2	°	
Heading Rotation Error (6-DoF)	100°/s rotation before SMT		0.2	0.1	0.3	3
	100°/s rotation after SMT		0.4	0.3	0.5	

Note 1: Data are referenced to the calibration plane and obtained from 20 pcs test samples.

Note 2: Measured after magnetometer calibration and in the absence of surrounding magnetic interference; the product needs to be configured to AHRS mode.

Note 3: Average per-turn error over 10 turns on a turntable.

10.5.2 INS Accuracy with External GNSS

Table 14: INS Accuracy with External GNSS

Outage Time	Position Accuracy RMS	Velocity Accuracy RMS	Attitude Accuracy RMS	
			Pitch/Roll	Heading
3 s	3 cm	0.03 m/s	0.15°	0.1°
10 s	30 cm	0.1 m/s	0.2°	0.15°
60 s	3 m	0.15 m/s	0.2°	0.25°

Note 1: Before GNSS outage, the module is in RTK positioning mode; after outage, odometer input is available; the external GNSS model is UM982.

11 System and Electrical Specifications

11.1 Electrical Specifications

Table 15: Electrical Specifications

Parameter	Condition	Min	Typ	Max	Unit	Remark
Operating Voltage Range VDD		3.2	-	5.5	V	
Power Consumption	HI06R2/N2			195	mW	
	HI06R3/N3			200		
	HI06R4/N4			205		
V_{OL}			-	0.4	V	
V_{OH}		2.6			V	
V_{IL}		-0.3		1	V	
V_{IH}		1.9		3.6	V	

11.2 Interface Specifications

Table 16: Interface Specifications

Interface	Parameter	Min	Typ	Max	Unit	Remark
UART1/UART2	Baud Rate	9600	115200	921600	bps	
	Output Data Rate	0	100	1000	Hz	
UART3	Baud Rate		115200		bps	Compatible with different GNSS module models
CAN	Baud Rate	125	500	1000	kbps	
	Output Data Rate	0	100	200	Hz	
	Differential Voltage		1.5	3	V	
	Termination Resistor		None			
I2C						Not supported by current firmware
SPI						Not supported by current firmware

11.3 System Specifications

Table 17: System Specifications

Parameter	Condition	Value	Remark
Dimensions		15 × 15.2 × 2.6 mm	
Weight		< 1.5 g	
System Start-up Time	IMU/VRU/AHRS	2 s	1
	INS	30 s	
Operating Temperature		-40 °C ~ 85 °C	
Shell Material		Nickel Silver	
Vibration Resistance		1.0 mm (10 Hz ~ 58 Hz), ≤20 g (58 Hz ~ 600 Hz)	
Environmental Compliance		Complies with relevant RoHS requirements	
Compliant materials		Refer to the latest official information for relevant certification and compliance documents	
Drop Test		Free drop 3 times from a 75 cm lab bench	
Temperature Shock Test		Temperature rises from -40 °C to 85 °C within 1 h, repeated 5 times	
Moisture Sensitivity Level (MSL)		MSL2	

Note 1: Time from power-on to valid data output. For the first startup of the INS system, it depends on the time required for GNSS to enter positioning mode, generally < 30 s.

11.4 Absolute Maximum Ratings

Table 18: Absolute Maximum Ratings

Parameter	Limit	Comment
Mechanical Shock	2000 g	Duration < 0.2 ms
Storage Temperature	-40 °C ~ 125 °C	
ESD (Human Body Model)	2 kV	JEDEC/ESDA JS-001
Input Voltage	9 V	
I/O to Ground Voltage	-0.3 V ~ 5 V	

12 Mechanical Dimensions

All dimensions are in mm.

12.1 Product Dimensions

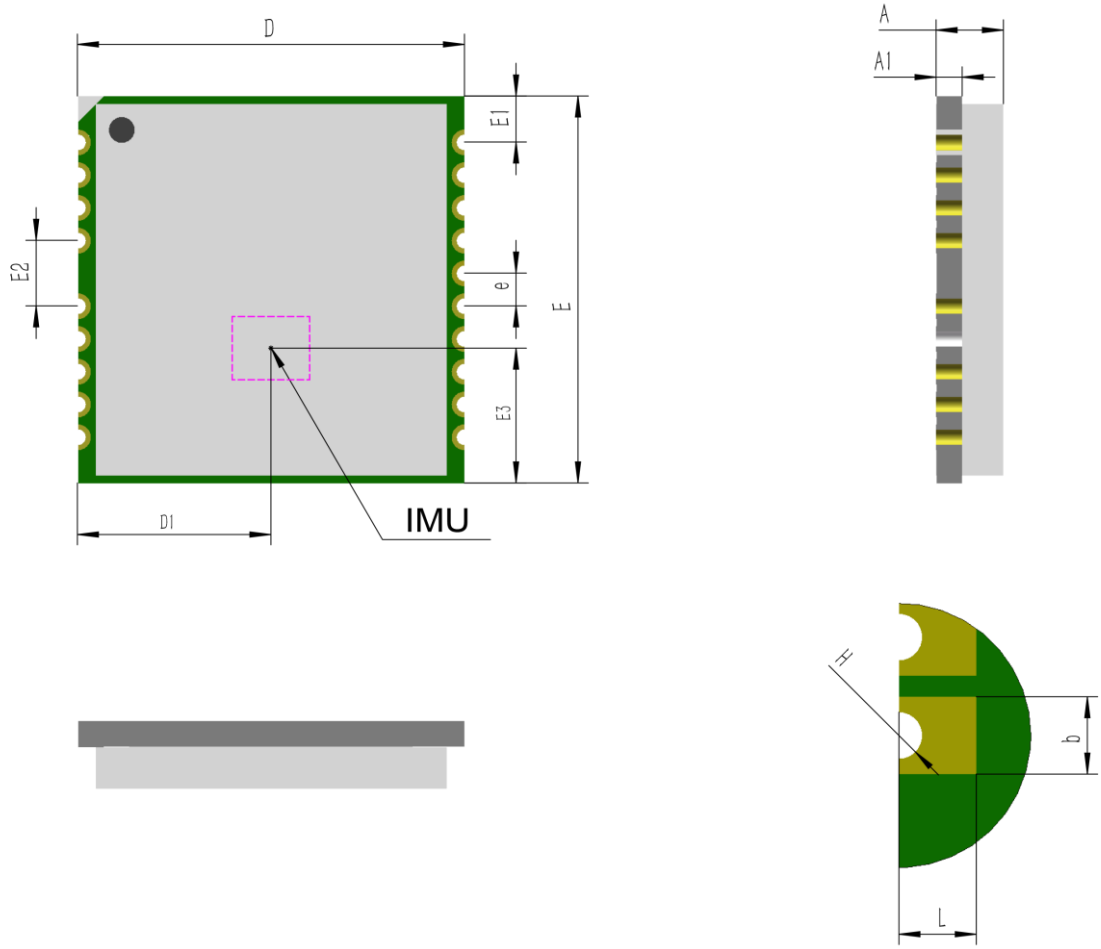

Figure 10: HI06 Mechanical Dimensions and IMU Position

Table 19: Product Dimension Data

Symbol	Min (mm)	Typ (mm)	Max (mm)
A	2.5	2.6	2.7
A1	0.95	1	1.05
D	14.8	15	15.2
D1	7.45	7.5	7.55
E	15	15.2	15.4
E1	1.69	1.885	2.1
E2	2.5	2.54	2.55
E3	4.9	5	5.1
e	1.25	1.27	1.28
L	0.95	1	1.05
b	0.87	0.9	0.92
H	R0.26	R0.27	R0.28

12.2 Recommended Footprint Dimensions

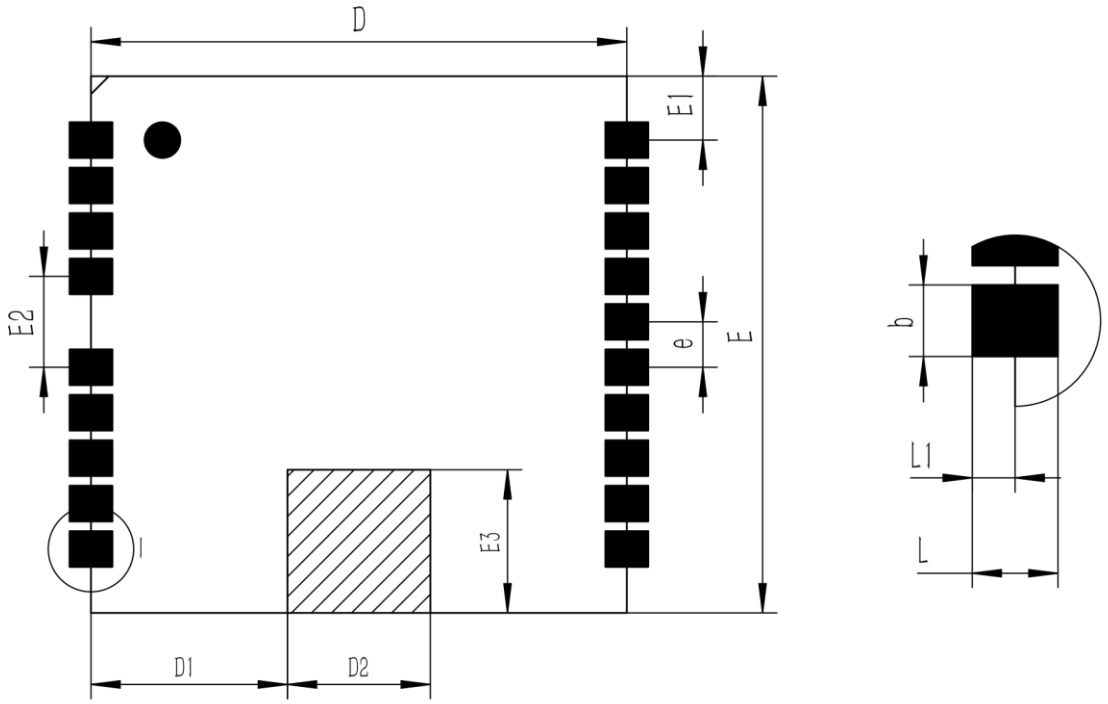

Figure 11: HI06 Recommended Footprint Dimensions

Note 1: Exposed copper is prohibited on the back side of the device. If the user uses an HI06 with magnetometer function, copper pouring and routing are prohibited in the shaded area.

Table 20: HI06 Recommended Footprint Dimensions

Symbol	Min(mm)	Typ(mm)	Max(mm)
D		15	
D1		5	
D2		5	
E		15.2	
E1		1.885	
E2		2.54	
E3		5	
e		1.27	
b		0.9	
L		2	
L1		1	

13 Coordinate System

13.1 IMU/VRU/AHRS Coordinate System

13.1.1 ENU (Default)

The body frame uses the right-forward-up (RFU) coordinate system, and the navigation frame uses the east-north-up (ENU) coordinate system. The accelerometer and gyroscope axis directions are shown in the figure below:

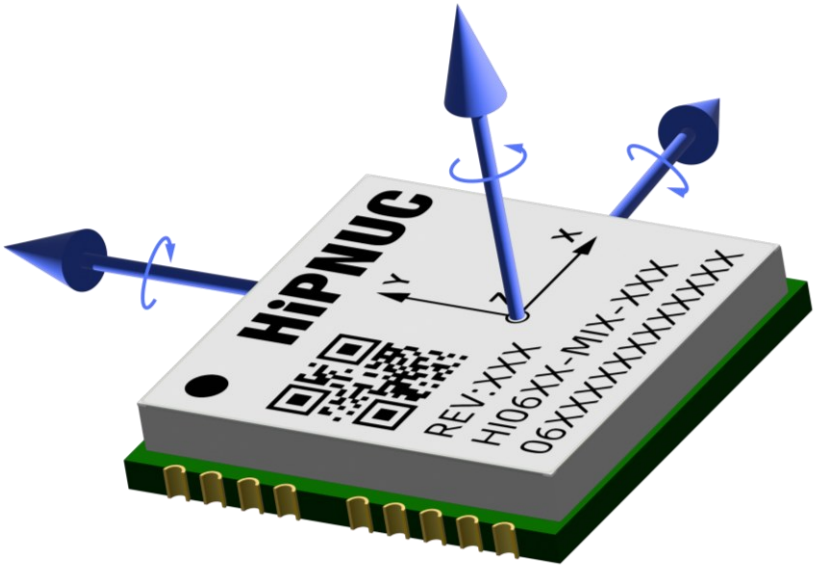

Figure 12: HI06 Coordinate System

The positive direction of angular velocity follows the right-hand rule. The quaternion output order is defined in the Command and Programming Manual. The Euler angle outputs correspond to yaw, pitch, and roll, and the rotation order uses the Z-X-Y (312) convention. For definitions involving intrinsic/extrinsic rotations and coordinate transformations, refer to the Command and Programming Manual. The specific definitions are as follows:

- Rotation about Z-axis: Yaw, range: -180° ~ 180°
- Rotation about X-axis: Pitch, range: -90° ~ 90°
- Rotation about Y-axis: Roll, range: -180° ~ 180°

When the module coordinate system coincides with the reference coordinate system, the ideal Euler angle outputs are Pitch = 0°, Roll = 0°, and Yaw = 0°.

For coordinate system rotation, refer to the Command and Programming Manual.

13.1.2 NWU and NED

The carrier can also be configured to the north-west-down (NWD) / north-east-down (NED) coordinate system. This needs to be configured by the user. Refer to the Command and Programming Manual for details.

13.2 INS System Coordinate System

The following coordinate and installation definitions apply to INS systems in which HI06NX is used together with a supported external GNSS module. If the external GNSS solution provides dual-antenna heading, antenna A and antenna B shall be installed according to the GNSS module requirements and the system coordinate definition described below. HI06 itself does not integrate GNSS antennas.

In a dual-antenna GNSS system, the two external GNSS antennas are defined as antenna A and antenna B according to the GNSS module or system labeling. A is the main antenna (positioning antenna), and B is the slave antenna (heading antenna). The vector determined by antennas A and B (from A to B) is called the heading baseline. The angle between the vector determined by antennas A and B and the forward direction of the carrier (positive IMU Y-axis direction) must be 0° (clockwise is positive). The recommended antenna spacing is between 0.8 m and 2 m. Note that after antenna position installation is completed, the module needs to be powered on again or restarted.



Figure 13: HI06 External GNSS Coordinate System Definition

Note 1: The antennas in the figure are only installation illustrations. Actual connection to the GNSS module is required.

14 Evaluation Board and Cabling

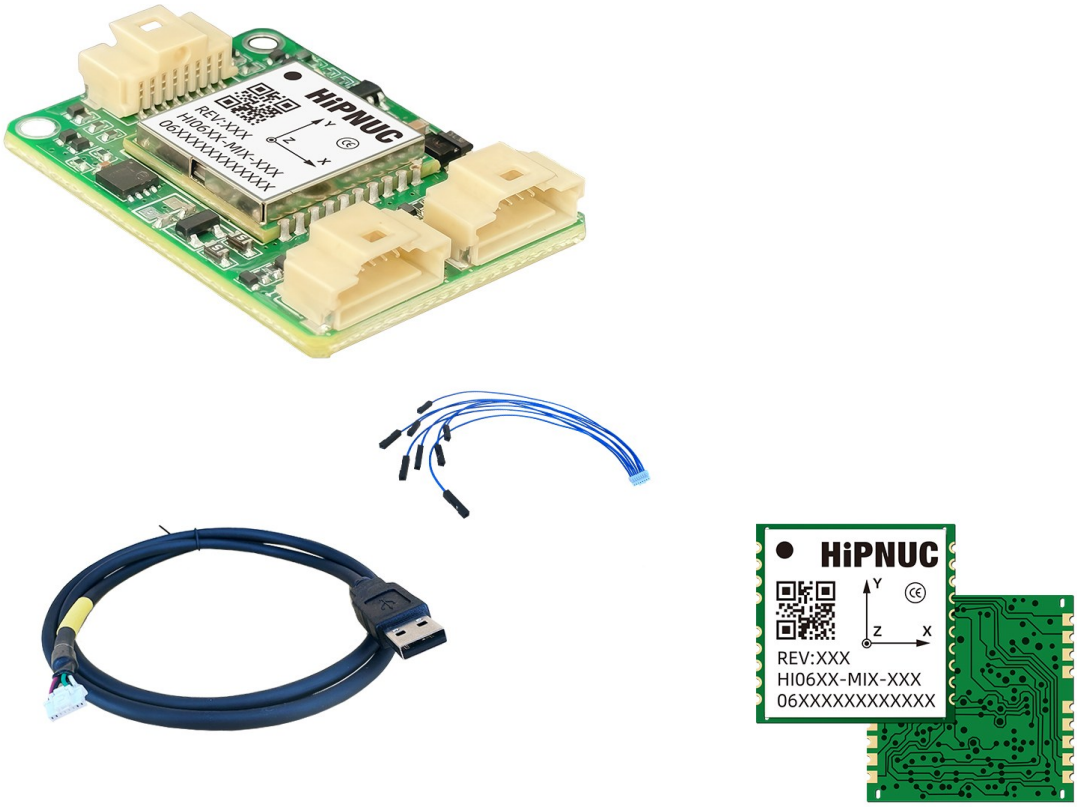

Figure 14: HI06 Series Evaluation Board and Cable

Note 1: For details, refer to the EVAL HI06 Evaluation Board User Guide.

15 Communication Protocols

15.1 Serial Binary Protocol

The product supports a serial binary communication protocol. For specific message formats, output configuration, and command definitions, refer to the Command and Programming Manual.

15.2 Modbus

By adding an external RS-485 transceiver, Modbus RTU-based communication can be supported. For detailed protocol information, refer to the Command and Programming Manual.

15.3 CAN

CAN communication supports CANopen and SAE J1939. For detailed protocol definitions, refer to the Command and Programming Manual.

16 Soldering and Installation

16.1 Reflow Profile

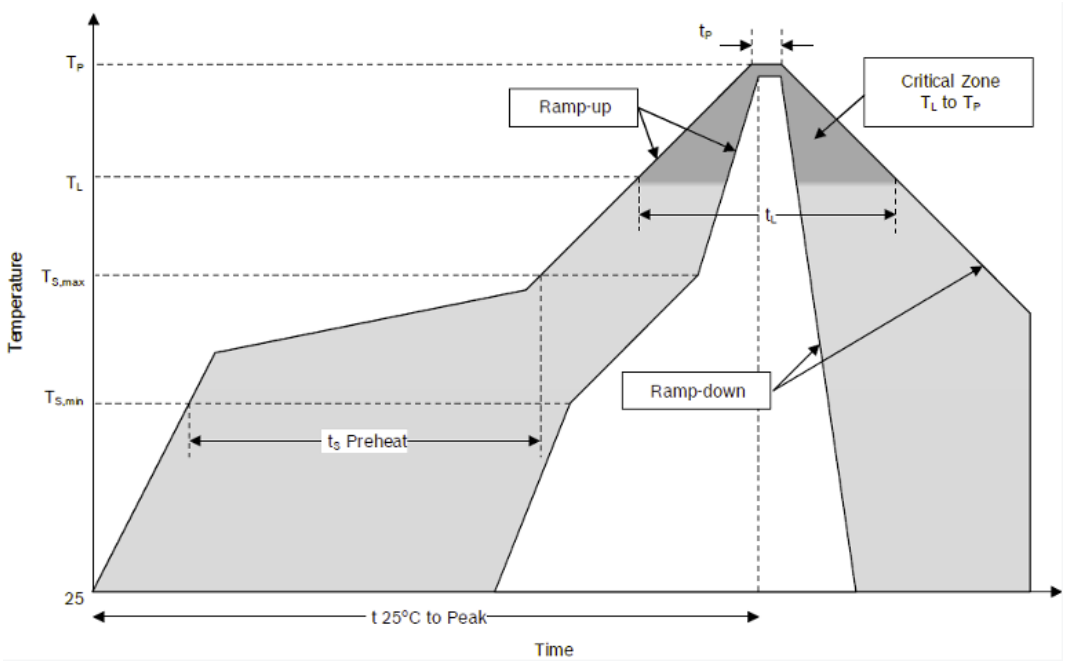

Figure 15: SMT Temperature Profile

Table 21: Reflow Profile Description

Parameter	Description
Average ramp-up rate (TSmax to Tp)	3 °C/s max
Temperature min (TSmin)	150 °C
Temperature max (TSmax)	200 °C
Time (TSmin to TSmax)	60-180 s
Temperature (TL)	170 °C
Time (tL)	60-150 s
Peak classification temperature (TP)	250 °C
Time within 5 °C of actual peak temperature (tp)	20-40 s
Ramp-down rate	6 °C/min max
Time 25 °C to peak temperature	8 min max

16.2 Installation Recommendations

MEMS sensors are high-precision measurement devices that include both electronic structures and mechanically sensitive structures. In order to obtain better measurement accuracy, assembly consistency, and mechanical reliability, users are advised to pay attention to the following during PCB design and system installation:

- For models with magnetometer, keep them away from motors, inductors, high-current loops, ferromagnetic materials, and magnetic fasteners as much as possible to reduce the influence of magnetic interference on heading accuracy
- It is recommended to mount the module horizontally on the measured carrier.
- It is not recommended to place the sensor directly under or next to button contacts, as this will cause mechanical stress.
- It is not recommended to place the sensor directly near high-temperature hotspots (e.g., controllers or graphics chips), as this will cause rapid temperature rise of the PCB and thus heat up the sensor.
- It is not recommended to place the sensor near areas with maximum mechanical stress (e.g., at the center of diagonal intersections). Mechanical stress can cause bending of the PCB and the sensor.

- It is not recommended to mount the sensor too close to screw holes. Avoid mounting the sensor in areas where the PCB may or is expected to resonate (vibrate).

If limited by the system structure and the above installation recommendations cannot be fully met, it is recommended to perform online offset or installation error compensation calibration for the specific application after complete system assembly, so as to reduce potential impact.

17 Packaging

17.1 Tape

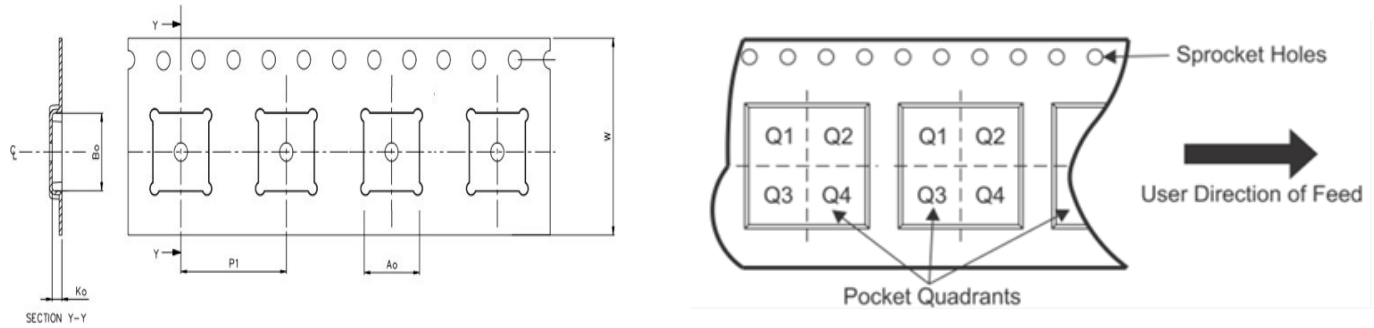

Figure 16: Tape Dimensions and Pin 1 Orientation

Table 22: Tape Dimensions

Device	A0 (mm)	B0 (mm)	K0 (mm)	P1 (mm)	W (mm)
HI06	15.4	15.4	2.9	20	24

17.2 Reel

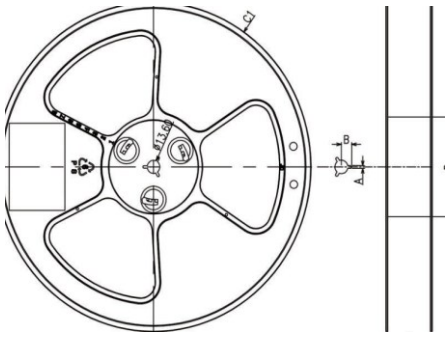

Figure 17: Reel Dimensions

Table 23: Reel Dimensions

Device	SPQ(pcs)	Reel Diameter C1(mm)	Reel Width H(mm)	A(mm)	B(mm)	T(mm)	D(mm)
HI06	1000	330	16.8	2.5	11	2.0	100

17.3 Packaging Method

The HI06 series uses standard carton packaging.

Table 24: Packing Configuration



HI06 Reel Vacuum Sealed Boxed

Table 25: Carton Dimensions

Device	SPQ(pcs)	L (mm)	W (mm)	H (mm)
HI06	1000	360	360	40

18 Disclaimer

The parameters, descriptions, and application information in this document are for product selection and design reference only, and do not constitute a final delivery commitment or quality guarantee. The suitability of the product must be evaluated by the user according to the specific application. Unless otherwise agreed in writing by both parties, Hipnuc shall not be liable for any direct or indirect loss caused by the use, interpretation, or reliance on this document. Hipnuc reserves the right to modify products, documents, and related information without prior notice.