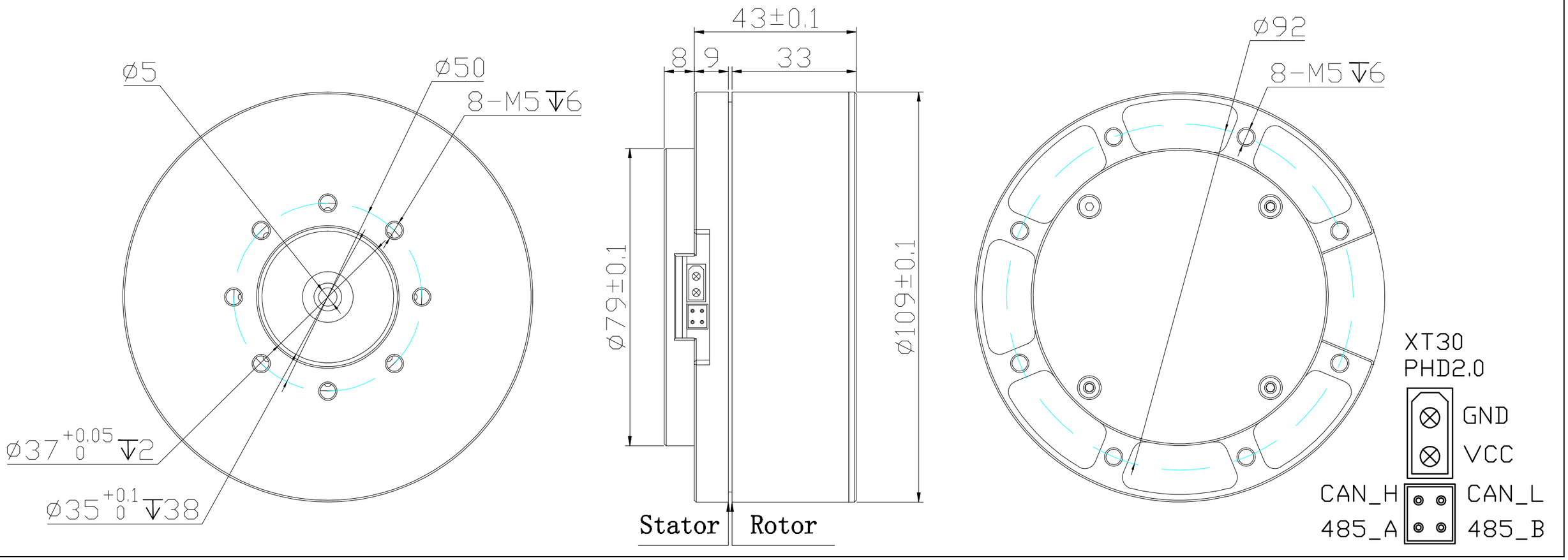
ø5
ø50
8-M5↧6
ø37 +0.05 0 ↧2
ø35 +0.1 0 ↧38
43±0.1
8
9
33
ø79±0.1
ø109±0.1
Stator
Rotor
ø92
8-M5↧6
XT30
PHD2.0
GND
VCC
CAN_H
CAN_L
485_A
485_B