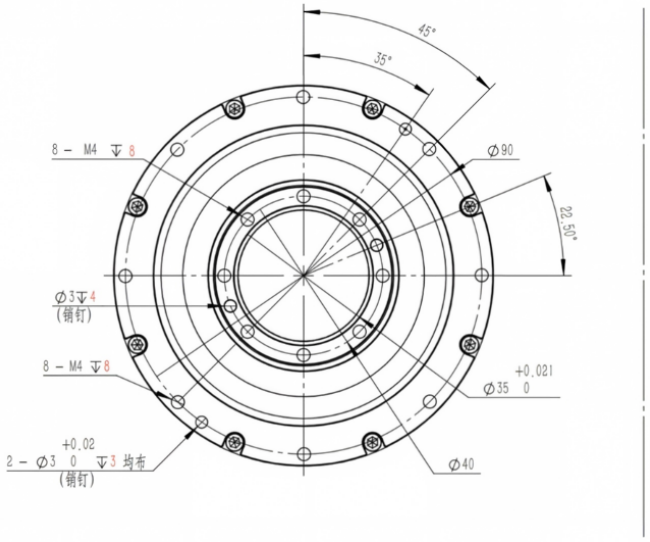
45°
35°
8 – M4 ↧8
∅90
22.50°
∅3↧4
(销钉)
8 – M4 ↧8
+0.021
∅35 0
+0.02
2 – ∅3 0 ↧3 均布
(销钉)
∅40

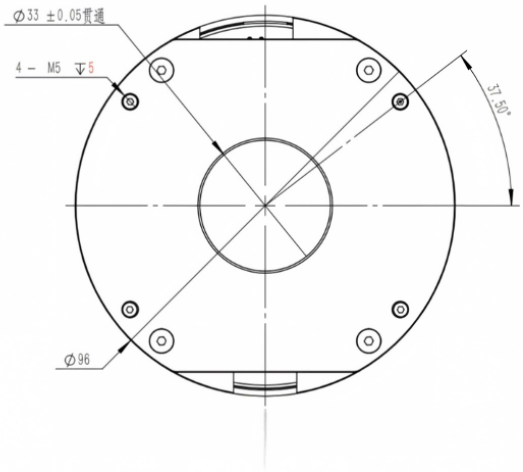
∅33 ±0.05贯通
4 – M5 ↧5
37.50°
∅96

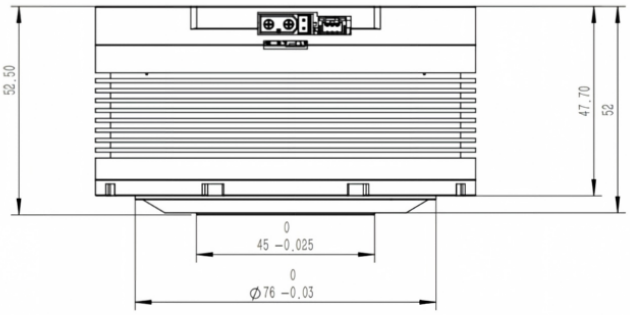
52.50
47.70
52
0
45 -0.025
0
∅76 -0.03